# 670 P

## 4WD Motor Grader

JOHN DEERE

# MADE TO GRADE AND LEAD THE WAY

Over the past six decades, John Deere motor graders have built a reputation for outstanding machine control and effortless grading precision. The innovative ideas of our customers have lead to a legacy of industry firsts. Performance boosters enabled with standard electrohydraulic (EH) controls like exclusive automation features. The choice between dual-joystick or fingertip controls. Grade-control solutions including fully integrated SmartGrade. And a tall mainframe that smoothly shoulders large loads and clears obstacles. Its optimized machine specs, reliable capability, and updated cab amenities that put operator comfort front and center can help take your productivity to the next level.

## FEATURES

**Taking it in tandem**
Crab steering on the four-wheel-drive 670 P-Tier positions the tandems on firm ground, reduces side drift, and increases side-slope stability. Clear visibility to the tandems enables unobstructed work around utilities and other obstacles.

**Power that checks and balances**
Balanced engine horsepower, torque, and blade pull produce generous force and lugging ability, to deliver more power to the ground, easily pull through tough spots, or tackle steep hills. John Deere motor graders are designed with optimal weight distribution over each axle, for outstanding stability and grading performance.

**Work your way**
Armrest-mounted EH controls help minimize effort and fatigue. Opt for state-of-the-art dual-joystick or fingertip controls that mimic the conventional control pattern. A field kit allows you to easily swap between the two. A steering wheel is also included.

**All about the operator**
Modern cab features next-generation eight-inch touchscreen display, Automatic Temperature Control system, and centralized machine-function switches, all close at hand. Ergonomic heated/ventilated seat with adjustable armrests is designed for all-day comfort. Enhanced right-hand console tilts for convenient access and storage.

**Unlimited grade control**
Industry-first John Deere SmartGrade Motor Graders are fully integrated and calibrated from the factory, arriving at your jobsite ready to work. In-cylinder position sensing allows the machine to stay on grade no matter what blade pitch, articulation angle, or circle offset you're running, without the limitations imposed by masted systems.

**Now you see it**
High-resolution rearview camera with dedicated in-cab monitor comes standard. Optional dual front alley camera with two in-cab displays presents an overview of the street ahead, improving operator awareness.

**Beyond beacons**
Optional new low-profile roof beacons enhance jobsite visibility. Optional add-on seat-belt-minder beacon is also available.

**Count on cross slope**
Standard cross slope maintains slopes by automatically adjusting one side of the blade while the operator controls the other. Cross slope can also be operated in "manual mode" as a slope meter. Automated cross slope simplifies holding a consistent slope by reducing operation to a single lever. Both dual-joystick controls and fingertip armrest controls come equipped with cross slope and can be easily upgraded to 3D SmartGrade.

**Durable details**
High-edge paint and powder-coated latches on service doors step up durability and help protect the machine exterior from wear and damage.

**Uptime is everything**
All daily service points, including fuel and diesel exhaust fluid (DEF), are grouped on the left side of the machine for convenient ground-level access. On the right, periodic-service points including the engine oil, hydraulic, transmission, differential, and fuel filter bank are within easy reach. Cooling package minus stacked coolers plus hinged swing-out fan simplifies core cleanout. Variable-speed hydraulically driven fan† runs only as fast or as often as needed, for conservation of power and fuel plus quiet operation.

†Standard for EPA Final Tier 4/EU Stage V; optional for EPA Tier 3/EU Stage IIIA.

**Positioned for precision**
Encoded sensors within the hydraulic cylinders help position them for maximum precision and force, boosting efficiency. The sensors also deliver diagnostics to catch potential system issues.

**Premium circle productivity**
Featuring a fully sealed bearing and pinion that run smooth and quiet, the industry-leading design of the optional premium circle reduces operating costs while delivering 40-percent more torque and 15-percent more speed than a traditional circle. The premium circle eliminates having to compensate for wear in the circle and improves accuracy when using a grade-control system — especially with John Deere SmartGrade. And greasing intervals of only four zerks every 500 hours make the premium circle easy to maintain. Durable dual-input and proven single-input circles are also available.

**Bad-weather warrior**
Available as a factory option, the John Deere Path mapping solution enhances efficiency and precision in snow-removal applications. Paired with SF-RTK for repeatable accuracy within one inch, operators get a better sense of road edges and boundaries in winter weather conditions.

**Connected machines**
John Deere construction equipment comes with in-base connectivity — free from subscriptions or annual renewals. Analyze critical machine data, track utilization, review diagnostic alerts, and more from **the John Deere Operations Center™.** The Operations Center also enables John Deere Connected Support™, which uses data from thousands of connected machines to proactively identify issues and help keep you running. With your approval, your dealer can also remotely monitor machine health, diagnose problems, and even update machine software without a trip to the jobsite.*

*Availability varies by region and product. Options not available in every country.

# PUT INTELLIGENCE TO WORK

With automation features including in-base Auto-Articulation, Blade Flip, and Machine Presets, it's push-button easy to set yourself apart from your competition:

– **Auto-Articulation** lets the operator increase the maneuverability of coordinated steering and articulation while using only the joystick-steering function to steer and operate other necessary functions without manually articulating the machine.

– Use **Blade Flip** to automatically mirror the circle to a preset angle.

– Easily prepare the machine for transport with **Machine Presets.** Stow the blade and ripper, turn on the lights including the hazards, and enable Auto-Shift with one push-button press.

Add these optional automation features to further enhance machine operation:

– **Auto-Shift PLUS** allows operators to move the machine and work without having to use the inching pedal.

– **Auto-Gain for Cross Slope** automatically adjusts gain settings based on ground speed to maximize performance.

– **Machine-Damage Avoidance*** reduces the risk of blade damage to machine structures during any operation.

– **Auto-Pass*** makes grading easy by automatically placing the blade on the ground and activating the grade-control system (when equipped) at the start of the pass, then automatically raising and resetting the blade at the end of it.

*Free 500-hour demo of Machine-Damage Avoidance and Auto-Pass options not available in all countries; see your local John Deere dealer for details.

# 670 P-TIER MOTOR GRADER SPECIFICATIONS

| Engine | 670 P-TIER | |
|---|---|---|
| Manufacturer and Model | John Deere PowerTech™ PSS 9.0L | John Deere PowerTech™ Plus 9.0L |
| Non-Road Emission Standard | EPA Final Tier 4/EU Stage V | EPA Tier 3/EU Stage IIIA |
| Cylinders | 6 | 6 |
| Displacement | 9.0L (548 cu. in.) | 9.0L (548 cu. in.) |
| Net Engine Power | | |
| Gear 1 | 134 kW (180 hp) | 134 kW (180 hp) |
| Gear 2 | 142 kW (190 hp) | 142 kW (190 hp) |
| Gear 3 | 153 kW (205 hp) | 153 kW (205 hp) |
| Gear 4 | 157 kW (210 hp) | 157 kW (210 hp) |
| Gear 5 | 164 kW (220 hp) | 164 kW (220 hp) |
| Gear 6 | 168 kW (225 hp) | 168 kW (225 hp) |
| Gear 7 | 172 kW (230 hp) | 172 kW (230 hp) |
| Gear 8 | 175 kW (235 hp) | 175 kW (235 hp) |
| Net Peak Torque | 1225 Nm (904 lb.-ft.) | 1222 Nm (902 lb.-ft.) |
| Net Torque Rise | 56% | 56% |
| Aspiration | Series turbocharged, charge-air cooled | Turbocharged, charge-air cooled |
| Lubrication | Full-flow spin-on filter and integral cooler | Full-flow spin-on filter and integral cooler |
| Air Cleaner With Restriction Indicator | Dual element, dry | Dual element, dry |
| **Cooling** | | |
| Engine Coolant, Extended Life, Rating | –37 deg. C (–34 deg. F) | |
| **Powertrain** | | |
| **Transmission** | Direct-drive John Deere PowerShift Plus™, modulated shift-on-the-go, Event-Based Shifting (EBS), inching pedal; independent transmission reservoir with separate filtration and cooling system | |
| Gears | | |
| Forward | 8 | |
| Reverse | 8 | |

| **Maximum Travel Speeds** | *No tire slip at 2,180 rpm, 14.0-R24 tires* | **Maximum Travel Speeds *(continued)*** | *No tire slip at 2,180 rpm, 14.0-R24 tires* |
|---|---|---|---|
| Gear 1 | 4.0 km/h (2.5 mph) | Gear 5 | 16.4 km/h (10.2 mph) |
| Gear 2 | 5.6 km/h (3.5 mph) | Gear 6 | 23.2 km/h (14.4 mph) |
| Gear 3 | 7.7 km/h (4.8 mph) | Gear 7 | 32.3 km/h (20.1 mph) |
| Gear 4 | 10.9 km/h (6.8 mph) | Gear 8 | 45.5 km/h (28.3 mph) |

| | |
|---|---|
| **Front Axle** | Heavy-duty welded fabrication |
| Oscillation (total) | 32 deg. |
| Wheel Lean Angle (each direction) | 20 deg. |
| **Differentials** | Spiral bevel; hydraulically actuated, clutch type can be applied on-the-go; selectable manual or automatic differential lock |
| **Steering (all models include steering wheel)** | All-hydraulic power-frame articulation for maneuverability and productivity; crab steering reduces side drift, positions tandems on firm ground, and increases side-slope stability; return-to-straight control included on electrohydraulic (EH) |
| Turning Radius (front steer and articulation) | 7.21 m (284 in.) (23 ft. 8 in.) |
| Articulation (both right and left) | 22 deg. |

Images and descriptions are for general information only. Some illustrations may depict product options or accessories NOT AVAILABLE in all regions or may require modifications to meet local regulations. Images of equipment models may be digitally or AI generated, are for illustration purposes only, and may not reflect actual products, features, options, or attachments. Equipment availability may be limited. Net engine power is with standard equipment including air cleaner, exhaust system, alternator, and cooling fan at test conditions specified per ISO 9249. No derating is required up to 3050-m (10,000 ft.) altitude. Specifications and designs are subject to change without notice and, where applicable, are in accordance with SAE standards. Unless otherwise noted, specifications are based on a unit with standard equipment; 14.0 x 610-mm (24 in.) 12 PR G2, Bias tires; and 3.66-m x 610-mm x 22-mm (12 ft. x 24 in. x 7/8 in.) high-strength, wear-resistant moldboard with 152-mm x 16-mm (6 in. x 5/8 in.) Dura-Max® through-hardened-steel cutting edges. Weights include lubricants, coolants, full fuel tank, and 79-kg (175 lb.) operator. For complete details, contact your John Deere dealer.

| **Powertrain** ***(continued)*** | **670 P-TIER** | |
|---|---|---|
| **Final Drives** | Inboard-mounted planetary sealed in cooled, filtered oil | |
| **Brakes** | Foot-controlled, hydraulically operated, multiple wet-disc brakes sealed in pressurized, cooled, filtered oil; both independent systems effective on all 4 tandem wheels | |
| Primary and Secondary Brakes | Hydraulically actuated, inboard of tandem pivot, self-adjusting, sealed in cooled and filtered oil, multi-disc (ISO 3450) | |
| Parking Brake | Automatically spring applied, hydraulically released, oil cooled, self-adjusting (ISO 3450) | |
| **Hydraulics** | | |
| Type | Closed-center, pressure-compensated load-sensing (PCLS), variable-displacement piston pump | |
| Maximum Pump Flow | 212 L/min. (56 gpm) | |
| Maximum System Pressure | 18 961 kPa (2,750 psi) | |
| Pump Displacement | 90 $cm^3$ (5.5 cu. in.) | |
| **Blade Function** | | |
| All-hydraulic, industry-standard lever placement of blade-function controls; includes float position; 7 discrete saddle positions | | |
| **Blade Range** | | |
| Lift Above Ground | 490 mm (19.3 in.) | |
| Blade Side Shift (right or left) | 683 mm (26.9 in.) | |
| Pitch at Ground Line | | |
| Forward | 42 deg. | |
| Back | 5 deg. | |
| Shoulder Reach Outside Wheels (frame straight, right or left) | 2083 mm (82.0 in.) (6 ft. 10 in.) | |
| Bank Cut Angle (right or left) | 90 deg. | |
| **Blade Pull** | | |
| At Maximum Operating Weight | 15 501 kg (34,173 lb.) | |
| **Electrical** | | |
| Solid-state load center and sealed-switch module | *EPA Final Tier 4/EU Stage V* | *EPA Tier 3/EU Stage IIIA* |
| Voltage | 24 volt | 24 volt |
| Number of Batteries | 2 | 2 |
| Battery Capacity | 1,400 CCA | 1,400 CCA |
| Reserve Capacity | 440 min. | 440 min. |
| Amp-Hour Rating | 224 amp-hour | 224 amp-hour |
| Base Alternator Rating | 300 amp | 130 amp |
| **Lights** | Driving lights; 2 high- and 2 low-beam halogen headlights; front and rear LED turn signals and marker lights; LED brake and hazard warning lights | |
| **Mainframe** | | |
| Type | Welded box construction | |
| Width (minimum) | 307 mm (12.1 in.) | |
| Height (minimum) | 307 mm (12.1 in.) | |
| Thickness | | |
| Side | 16 mm (0.63 in.) | |
| Top and Bottom Plate | 23 mm (0.89 in.) | |

Images and descriptions are for general information only. Some illustrations may depict product options or accessories NOT AVAILABLE in all regions or may require modifications to meet local regulations. Images of equipment models may be digitally or AI generated, are for illustration purposes only, and may not reflect actual products, features, options, or attachments. Equipment availability may be limited. Net engine power is with standard equipment including air cleaner, exhaust system, alternator, and cooling fan at test conditions specified per ISO 9249. No derating is required up to 3050-m (10,000 ft.) altitude. Specifications and designs are subject to change without notice and, where applicable, are in accordance with SAE standards. Unless otherwise noted, specifications are based on a unit with standard equipment; 14.0 x 610-mm (24 in.) 12 PR G2, Bias tires; and 3.66-m x 610-mm x 22-mm (12 ft. x 24 in. x 7/8 in.) high-strength, wear-resistant moldboard with 152-mm x 16-mm (6 in. x 5/8 in.) Dura-Max® through-hardened-steel cutting edges. Weights include lubricants, coolants, full fuel tank, and 79-kg (175 lb.) operator. For complete details, contact your John Deere dealer.

# 670 P-TIER

| Draft Frame (drawbar) | 670 P-TIER | |
|---|---|---|
| Welded box construction machined for flatness with double ball-and-socket pivot connection | | |
| **Circle** | | |
| Welded construction, heat-treated, machined for flatness | | |
| | *Standard Circle* | *Premium Circle* |
| Circle Diameter | 1524 mm (60 in.) | 1524 mm (60 in.) |
| Rotation | 360 deg. | 360 deg. |
| Surface | Quick-change bronze or nylon wear inserts | Sealed and lubricated roller element slewing bearing |
| Pinion/Ring-Gear Connection | Adjustable backlash and open for serviceability | No adjustment; fully sealed and lubricated |
| Drive | Hydraulic motor and worm gear with positive lock | Hydraulic motor and worm gear with positive lock |
| Slip Clutch | Option | Standard |
| Circle Side Shift | | |
| Right | 787 mm (31 in.) | 787 mm (31 in.) |
| Left | 787 mm (31 in.) | 787 mm (31 in.) |
| **Moldboard** | | |
| High-strength, pre-stressed for higher strength; wear-resistant, high-carbon steel and reversible end bits; blade side-shift wear system includes quick-change replaceable wear inserts and quick-adjust jackscrew system | | |
| Base Length | 3.66 m (144 in.) (12 ft. 0 in.) | |
| Height (measured along arc, including cutting edge) | 610 mm (24 in.) | |
| Thickness | 22 mm (0.88 in.) | |
| **Cutting Edge** | | |
| Dura-Max™ through-hardened steel edge | | |
| Thickness | 16 mm (0.62 in.) | |
| Width | 152 mm (6 in.) | |
| **Scarifiers** | | |
| | *Front* | *Mid-mount* |
| Type | V-type toolbar with 2-pitch positions and hydraulic float | Radial linkage, with NeverGrease™ pin joints; V-type manual 3-pitch positions and hydraulic float |
| Width of Cut | 1.20 m (48.0 in.) (4 ft. 0 in.) | 1.19 m (46.7 in.) (3 ft. 11 in.) |
| Number of Shanks/Teeth | 5 (maximum capacity 9) | 11 |
| Lift Above Ground | 589 mm (23.2 in.) | 335 mm (13.2 in.) |
| Maximum Depth | 335 mm (13.2 in.) | 325 mm (12.8 in.) |
| Shank | | |
| Spacing | 146 mm (5.75 in.) | 117 mm (4.6 in.) |
| Size | 25 x 76 mm (1 x 3 in.) | 25 x 76 mm (1 x 3 in.) |
| **Front Lift Group (Balderson-style)** | | |
| Parallel linkage, mechanical pins, and hydraulic float | | |
| Lift | | |
| Above Ground (top of tube) | 1864 mm (73.4 in.) | |
| Range | 988 mm (38.9 in.) | |
| **Front Dozer Blade** | | |
| Parallel linkage and hydraulic float | | |
| Lift Above Ground | 706 mm (27.8 in.) | |

Images and descriptions are for general information only. Some illustrations may depict product options or accessories NOT AVAILABLE in all regions or may require modifications to meet local regulations. Images of equipment models may be digitally or AI generated, are for illustration purposes only, and may not reflect actual products, features, options, or attachments. Equipment availability may be limited. Net engine power is with standard equipment including air cleaner, exhaust system, alternator, and cooling fan at test conditions specified per ISO 9249. No derating is required up to 3050-m (10,000 ft.) altitude. Specifications and designs are subject to change without notice and, where applicable, are in accordance with SAE standards. Unless otherwise noted, specifications are based on a unit with standard equipment; 14.0 x 610-mm (24 in.) 12 PR G2, Bias tires; and 3.66-m x 610-mm x 22-mm (12 ft. x 24 in. x 7/8 in.) high-strength, wear-resistant moldboard with 152-mm x 16-mm (6 in. x 5/8 in.) Dura-Max® through-hardened-steel cutting edges. Weights include lubricants, coolants, full fuel tank, and 79-kg (175 lb.) operator. For complete details, contact your John Deere dealer.

| Rear Ripper/Scarifier | 670 P-TIER | |
|---|---|---|
| Parallel linkage, with NeverGrease pin joints, hydraulic float, and integrated hitch | | |
| | *Ripper* | *Scarifier* |
| Width of Cut | 2.21 m (87.2 in.) (7 ft. 3 in.) | 2.18 m (86.0 in.) (7 ft. 2 in.) |
| Number of Shanks/Teeth | 3 (maximum capacity 5) | None standard (maximum capacity 9) |
| Lift Above Ground | 602 mm (23.7 in.) | 810 mm (31.9 in.) |
| Maximum Depth | 426 mm (16.8 in.) | 323 mm (12.7 in.) |
| Force | | |
| Penetration | 9526 kg (21,000 lb.) | — |
| Pry-Out | 12 580 kg (27,734 lb.) | — |
| Shank Size | 61.5 x 133 mm (2.42 x 5.25 in.) | 25 x 76 mm (1 x 3 in.) |
| **Operator Station** | | |
| Low-profile cab with ROPS (ISO 3471-2008) and FOPS (ISO 3449-2005) | | |
| **Tires/Wheels** | | |
| | *14R24 on 254-mm (10 in.) Rim* | *17.5R25 on 356-mm (14 in.) Rim* |
| Wheel Tread on Ground | 2.08 m (82.0 in.) | 2.16 m (85.0 in.) |
| Ground Clearance (front axle) | 587 mm (23.1 in.) | 587 mm (23.1 in.) |
| **Serviceability** | | |
| **Refill Capacities** | *EPA Final Tier 4/EU Stage V* | *EPA Tier 3/EU Stage IIIA* |
| Fuel Tank | 397.0 L (105 gal.) | 416.5 L (110 gal.) |
| Diesel Exhaust Fluid (DEF) Tank | 22.5 L (6 gal.) | — |
| Cooling System | 55.0 L (14.5 gal.) | 48.5 L (12.8 gal.) |
| Engine Oil With Filter | 28.4 L (7.5 gal.) | 28.0 L (7.4 gal.) |
| Transmission Fluid | 28.4 L (7.5 gal.) | 28.4 L (7.5 gal.) |
| Differential Housing | 38.0 L (10 gal.) | 38.0 L (10 gal.) |
| Tandem Housings (each) | 74.0 L (19.5 gal.) | 74.0 L (19.5 gal.) |
| Circle Gearbox | 5.7 L (1.5 gal.) | 5.7 L (1.5 gal.) |
| Hydraulic Reservoir | 60.5 L (16 gal.) | 53.0 L (14 gal.) |
| **Operating Weights** | | |
| With Full Fuel Tank, 3.66-m x 610-mm x 22-mm (12 ft. x 24 in. x 7/8 in.) Moldboard With 152-mm x 16-mm (6 in. x 5/8 in.) Cutting Edges, 14-24 Bias L2 Tires, and 79-kg (175 lb.) Operator | *EPA Final Tier 4/EU Stage V* | *EPA Tier 3/EU Stage IIIA* |
| Front | 4200 kg (9,260 lb.) | 4210 kg (9,281 lb.) |
| Rear | 11 798 kg (26,010 lb.) | 11 366 kg (25,058 lb.) |
| Total | 15 998 kg (35,270 lb.) | 15 576 kg (34,339 lb.) |
| Typical Operating Weight With Front Push Block, Rear Ripper/Scarifier, and Other Equipment | | |
| Front | 5672 kg (12,505 lb.) | 5688 kg (12,540 lb.) |
| Rear | 13 746 kg (30,306 lb.) | 13 317 kg (29,359 lb.) |
| Total | 19 418 kg (42,811 lb.) | 19 005 kg (41,899 lb.) |
| Maximum Operating Weight | 24 948 kg (55,000 lb.) | 24 948 kg (55,000 lb.) |

Images and descriptions are for general information only. Some illustrations may depict product options or accessories NOT AVAILABLE in all regions or may require modifications to meet local regulations. Images of equipment models may be digitally or AI generated, are for illustration purposes only, and may not reflect actual products, features, options, or attachments. Equipment availability may be limited. Net engine power is with standard equipment including air cleaner, exhaust system, alternator, and cooling fan at test conditions specified per ISO 9249. No derating is required up to 3050-m (10,000 ft.) altitude. Specifications and designs are subject to change without notice and, where applicable, are in accordance with SAE standards. Unless otherwise noted, specifications are based on a unit with standard equipment; 14.0 x 610-mm (24 in.) 12 PR G2, Bias tires; and 3.66-m x 610-mm x 22-mm (12 ft. x 24 in. x 7/8 in.) high-strength, wear-resistant moldboard with 152-mm x 16-mm (6 in. x 5/8 in.) Dura-Max® through-hardened-steel cutting edges. Weights include lubricants, coolants, full fuel tank, and 79-kg (175 lb.) operator. For complete details, contact your John Deere dealer.

# 670 P-TIER

| Option Weights | 670 P-TIER |
|---|---|
| Moldboards With Through-Hardened Dura-Max Cutting Edge | |
| 3.66 m x 610 mm x 22 mm (12 ft. x 24 in. x 7/8 in.) With 152-mm x 16-mm (6 in. x 5/8 in.) Cutting Edge and 19-mm (3/4 in.) Hardware | 0 kg (0 lb.) |
| 4.27 m x 610 mm x 22 mm (14 ft. x 24 in. x 7/8 in.) With 152-mm x 16-mm (6 in. x 5/8 in.) Cutting Edge and 19-mm (3/4 in.) Hardware | 105 kg (231 lb.) |
| 4.27 m x 610 mm x 22 mm (14 ft. x 24 in. x 7/8 in.) With 203-mm x 19-mm (8 in. x 3/4 in.) Cutting Edge and 19-mm (3/4 in.) Hardware | 159 kg (350 lb.) |
| 4.27 m x 686 mm x 25 mm (14 ft. x 27 in. x 1 in.) With 203-mm x 19-mm (8 in. x 3/4 in.) Cutting Edge and 19-mm (3/4 in.) Hardware | 252 kg (556 lb.) |
| Extensions, 610 mm (2 ft.) (right or left) | |
| For Use With 610-mm (24 in.) Moldboards | 116 kg (255 lb.) |
| For Use With 686-mm (27 in.) Moldboards | 120 kg (265 lb.) |
| Overlay End Bits, Reversible (one pair) | |
| For 152-mm (6 in.) Cutting Edge | 19.5 kg (43 lb.) |
| For 203-mm (8 in.) Cutting Edge | 23 kg (51 lb.) |
| Heavy-Duty Dual-Input Circle-Drive Gearbox | 14 kg (31 lb.) |
| Circle-Drive Slip Clutch | 9 kg (20 lb.) |
| Circle | |
| Standard | 0 kg (0 lb.) |
| Premium | 289 kg (638 lb.) |
| Moldboard Impact-Absorption System | 43 kg (95 lb.) |
| Ripper/Scarifier, Rear Mounted With Hitch and Ripper Shanks (3) | 1139 kg (2,510 lb.) |
| Scarifier Shanks With Teeth (9 for rear ripper/scarifier) | 68 kg (150 lb.) |
| Ripper Shanks and Teeth (2) | 63 kg (139 lb.) |
| Rear Counterweight With Integral Rear Hitch | 727 kg (1,603 lb.) |
| Rear Hitch | 54.4 kg (120 lb.) |
| Push Block, Front | 1338 kg (2,950 lb.) |
| Scarifier | |
| Front Mount With Teeth (5) | 831 kg (1,833 lb.) |
| Mid-Mount With Teeth (11) | 1481 kg (3,265 lb.) |

| Option Weights *(continued)* | 670 P-TIER |
|---|---|
| Front Lift Group (Balderson-style) | 763 kg (1,682 lb.) |
| Front Dozer Blade | 1039 kg (2,290 lb.) |
| Tires | |
| 14.00-24, 12 PR G2 | 0 kg (0 lb.) |
| 17.5-25, 12 PR G2/L2 | 114 kg (252 lb.) |
| 14.00-R24, Radial, G2/L2 General Purpose | 220 kg (486 lb.) |
| 14.00-R24, Radial, G2/L2 Snow | 261 kg (576 lb.) |
| 17.5-R25, Radial, L2 General Purpose | 272 kg (600 lb.) |
| 17.5-R25, Radial, G2/L2 Snow | 316 kg (696 lb.) |
| 17.5-R25, Radial, G3/L3 General Purpose | 362 kg (798 lb.) |
| 1-Piece Rims | |
| 229 mm x 610 mm (9 in. x 24 in.) | 0 kg (0 lb.) |
| 330 mm x 635 mm (13 in. x 25 in.) | 65 kg (144 lb.) |
| Multi-Piece Rims | |
| 254 mm x 610 mm (10 in. x 24 in.) | 180 kg (396 lb.) |
| 356 mm x 635 mm (14 in. x 25 in.) | 267 kg (588 lb.) |
| Fenders | |
| Front | 99 kg (218 lb.) |
| Rear | 158 kg (348 lb.) |
| Opening Front and Side Windows | 14.5 kg (32 lb.) |
| Premium Air-Suspension, Heated Seat With Adjustable Arm- and Headrests | 13 kg (28 lb.) |
| Coolant Heater | 4 kg (9 lb.) |
| Quick Service | 11 kg (24 lb.) |
| Secondary Steering | 26 kg (58 lb.) |
| Fire Extinguisher | 14.5 kg (32 lb.) |
| Lighting Packages | |
| 10 Halogen Lights | 4.5 kg (10 lb.) |
| 18 Halogen Lights | 8 kg (18 lb.) |
| 16 LED Premium With Front and Rear Extensions (EU/SV) | 28 kg (62 lb.) |
| 18 LED Lights | 7 kg (16 lb.) |
| High-Front Light Bar for Snowplowing | 20 kg (44 lb.) |
| Auxiliary Hydraulic Control Valve Section and Controls | 7 kg (15 lb.) |
| Hydraulics for Front-Mounted Equipment | 9 kg (19 lb.) |

Images and descriptions are for general information only. Some illustrations may depict product options or accessories NOT AVAILABLE in all regions or may require modifications to meet local regulations. Images of equipment models may be digitally or AI generated, are for illustration purposes only, and may not reflect actual products, features, options, or attachments. Equipment availability may be limited. Net engine power is with standard equipment including air cleaner, exhaust system, alternator, and cooling fan at test conditions specified per ISO 9249. No derating is required up to 3050-m (10,000 ft.) altitude. Specifications and designs are subject to change without notice and, where applicable, are in accordance with SAE standards. Unless otherwise noted, specifications are based on a unit with standard equipment; 14.0 x 610-mm (24 in.) 12 PR G2, Bias tires; and 3.66-m x 610-mm x 22-mm (12 ft. x 24 in. x 7/8 in.) high-strength, wear-resistant moldboard with 152-mm x 16-mm (6 in. x 5/8 in.) Dura-Max® through-hardened-steel cutting edges. Weights include lubricants, coolants, full fuel tank, and 79-kg (175 lb.) operator. For complete details, contact your John Deere dealer.

| Machine Dimensions | | 670 P-TIER |
|---|---|---|
| A | Height to Top of Cab | 3.18 m (10 ft. 5 in.) |
| B | Height to Top of Exhaust | 3.10 m (10 ft. 2 in.) |
| C | Height to Top of Blade-Lift Cylinders | 3.05 m (10 ft. 0 in.) |
| D | Tandem Axle Spacing | 1.54 m (5 ft. 1 in.) |
| E | Blade Base | 2.57 m (8 ft. 5 in.) |
| F | Wheelbase | 6.16 m (20 ft. 3 in.) |
| G | Overall Length | 8.89 m (29 ft. 2 in.) |

| Machine Dimensions *(continued)* | | 670 P-TIER |
|---|---|---|
| H | Overall Length With Scarifier | 9.69 m (31 ft. 9 in.) |
| I | Overall Length With Push Block and Ripper | 9.99 m (32 ft. 9 in.) |
| I' | Overall Length With Scarifier and Ripper | 10.59 m (34 ft. 9 in.) |
| | Overall Length With Front-Mounted Blade and Ripper | 10.60 m (34 ft. 9 in.) |
| J | Overall Width With 14.00-R24 Tires* | 2.49 m (8 ft. 2 in.) |
| J' | Overall Width With 17.5-R25 Tires* | 2.64 m (8 ft. 8 in.) |

**Also see Tires/Wheels on page 9.*

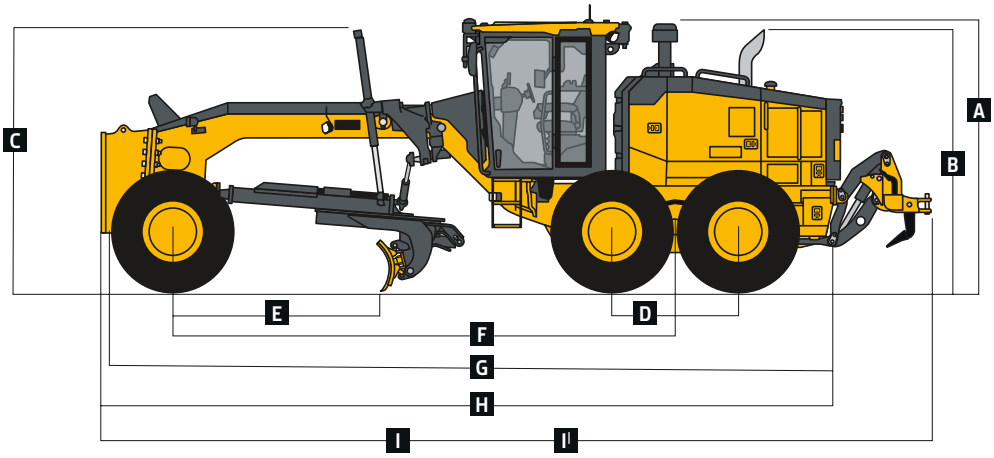


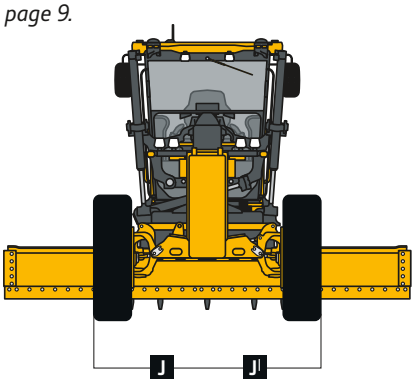


Images and descriptions are for general information only. Some illustrations may depict product options or accessories NOT AVAILABLE in all regions or may require modifications to meet local regulations. Images of equipment models may be digitally or AI generated, are for illustration purposes only, and may not reflect actual products, features, options, or attachments. Equipment availability may be limited. Net engine power is with standard equipment including air cleaner, exhaust system, alternator, and cooling fan at test conditions specified per ISO 9249. No derating is required up to 3050-m (10,000 ft.) altitude. Specifications and designs are subject to change without notice and, where applicable, are in accordance with SAE standards. Unless otherwise noted, specifications are based on a unit with standard equipment; 14.0 x 610-mm (24 in.) 12 PR G2, Bias tires; and 3.66-m x 610-mm x 22-mm (12 ft. x 24 in. x 7/8 in.) high-strength, wear-resistant moldboard with 152-mm x 16-mm (6 in. x 5/8 in.) Dura-Max® through-hardened-steel cutting edges. Weights include lubricants, coolants, full fuel tank, and 79-kg (175 lb.) operator. For complete details, contact your John Deere dealer.

MG670PAU (25-11)

JOHN DEERE